Rev	Description	Designed	Date	Approved
A	Material changed (was Robalon)	holarj02	20/02/2015	----

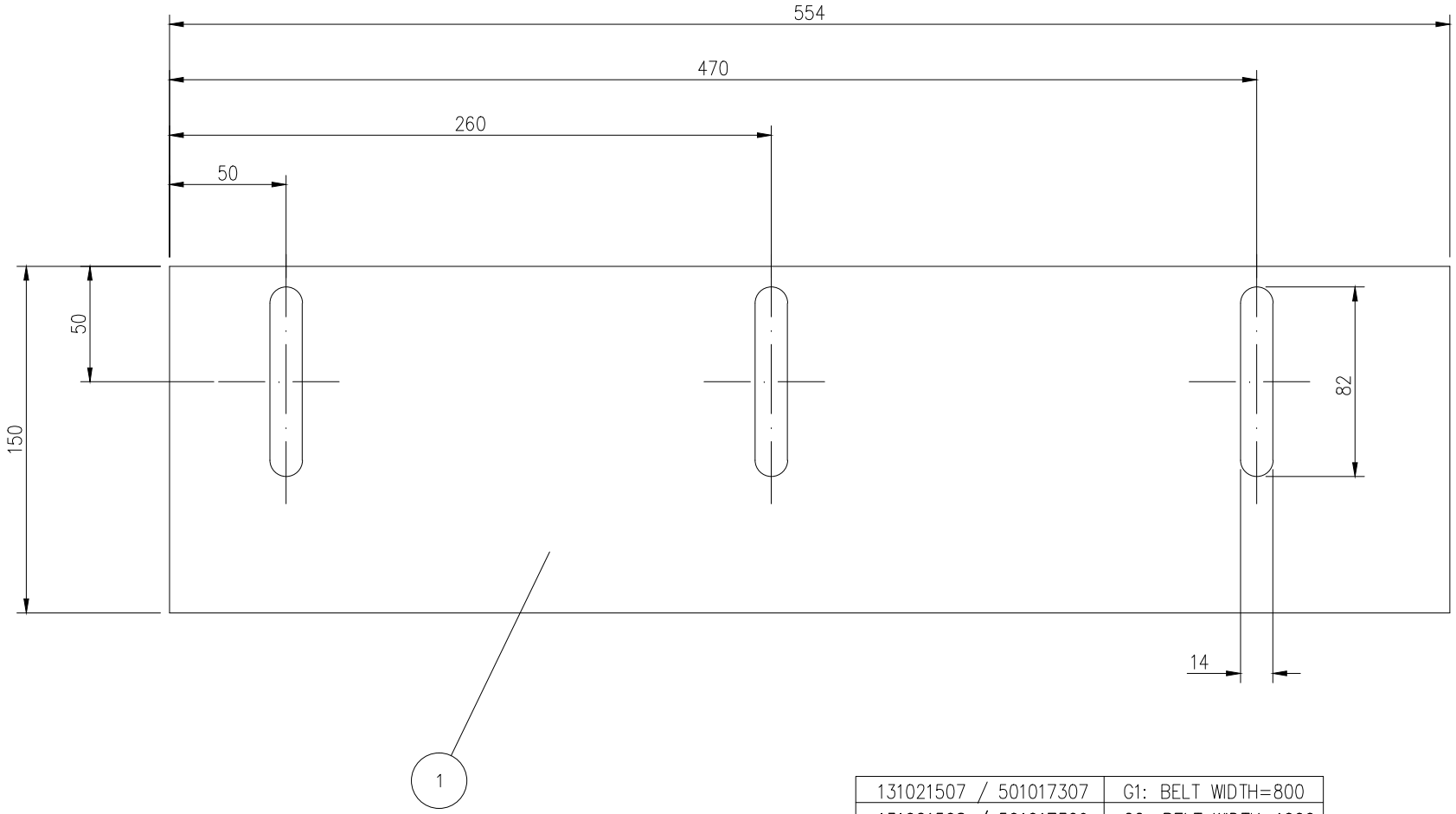

131021507 / 501017307	G1: BELT WIDTH=800
131021508 / 501017309	G2: BELT WIDTH=1000
131021509 / 501017311	G3: BELT WIDTH=1200
131021513 / 501017312	G4: BELT WIDTH=1400
131021514 / 501017314	G5: BELT WIDTH=1600

FN	Description	Basic Material Name	Basic Material Std	Length	Width	Item	Drawing	Weight	Unit	Qty
1	PLATE - 10 PE-HD-HMW AMC 6206 00 00 000	PE-HD-HMW		554.0	150.0	203122832		0.789	kg	1

Customer: TAIL PULLEY MODULE	AMC: ----	Basic Material Name: ----	Basic Material Standard: ----
Net Weight kg: 0.789			
Pos. No.: ----	Customer Drawing No.: ----		Designed: A.TURUNEN
Date: 27/11/2002			
Product Type: BBC10	Product Code: BBC10		Drawn: ArT
Date: 27/11/2002			
Size: A3	Scale: 1:2	Description Line 1 (EN): SCRAPER, BELT PLOUGH BBC10, B 1000	Checked: mtm
Date: ----			
Division: KW	Prod. Home: 1261	System: AUTOCAD_03	Description Line 2 (EN): ----
Approved: ----			
Date: ----			
Replacement for Drawing: ----	Rev. --	Replaced by Drawing: ----	Rev. --
Copy from Drawing: ----			
Rev.: ----	Sort: ----		
SAP Mat. No./Variant: 131021508	Reference Drawing: ----		Old Drawing No.: ---- 123066562
Rev.: ----	M-Film: ----		
SAP Main WBS Element: ----			Drawing No.: 501017309
Rev.: A	Sheet: /1		

ANDRITZ
WOOD PROCESSING

GENERAL TOLERANCES LINEAR DIMENSIONS	Nominal measure	>0.5 ⩽3	>3 ⩽6	>6 ⩽30	>30 ⩽120	>120 ⩽400	>400 ⩽1000	>1000 ⩽2000	>2000 ⩽4000	>4000 ⩽8000	>8000 ⩽12000	>12000 ⩽16000	>16000 ⩽20000	>20000
–Welding	ISO13920–B	±1	±1	±1	±2	±2	±3	±4	±6	±8	±10	±12	±14	±16
–Machining	ISO 2768–m	±0.1	±0.1	±0.2	±0.3	±0.5	±0.8	±1.2	±2	±3	±4	±5	±6	–
–Chamfers, radius	ISO 2768–m	±0.2	±0.5	±1.0										
–Cutting, bending	ISO 2768–c	±0.2	±0.3	±0.5	±0.8	±1.2	±2	±3	±4	±5	±6	±7	±8	–

ANGULAR DIMENSIONS
–Welding ISO13920–B
–Machining ISO 2768–m
–Bending< ISO 2768–c s<4
ISO 2768–v s⩾4

SYMBOLS
–Surface roughness ISO 1302–Ra
–Welding symbols ISO 2553
–Tolerancing ISO 8015

GEOM.TOL.
–Symbols ISO 1101
–Welding ISO13920–G
–Machining ISO 2768–K

–Flame cutting < ISO 9013–IIB, ISO 9013–IIG
–Castings, machine. ISO 8062–CT10
–Castings, handm. ISO 8062–CT12
–Forgings SFS 3507, DIN 7527

MISCELLANEOUS
–Weldingclass C (min.), ISO 5817

This document constitutes confidential and proprietary information of Andritz Companies. Any party accepting receipt of this document does so on the express understanding and agreement that it will neither reproduce, disclose to third parties or use this document for any purpose other than those expressly agreed to by any Andritz Company.

Drawing sheet ISO 5457:1999 – A3