This document is our property and shall not without our permission be altered, copied, used for manufacturing or communicated to any other person or company.

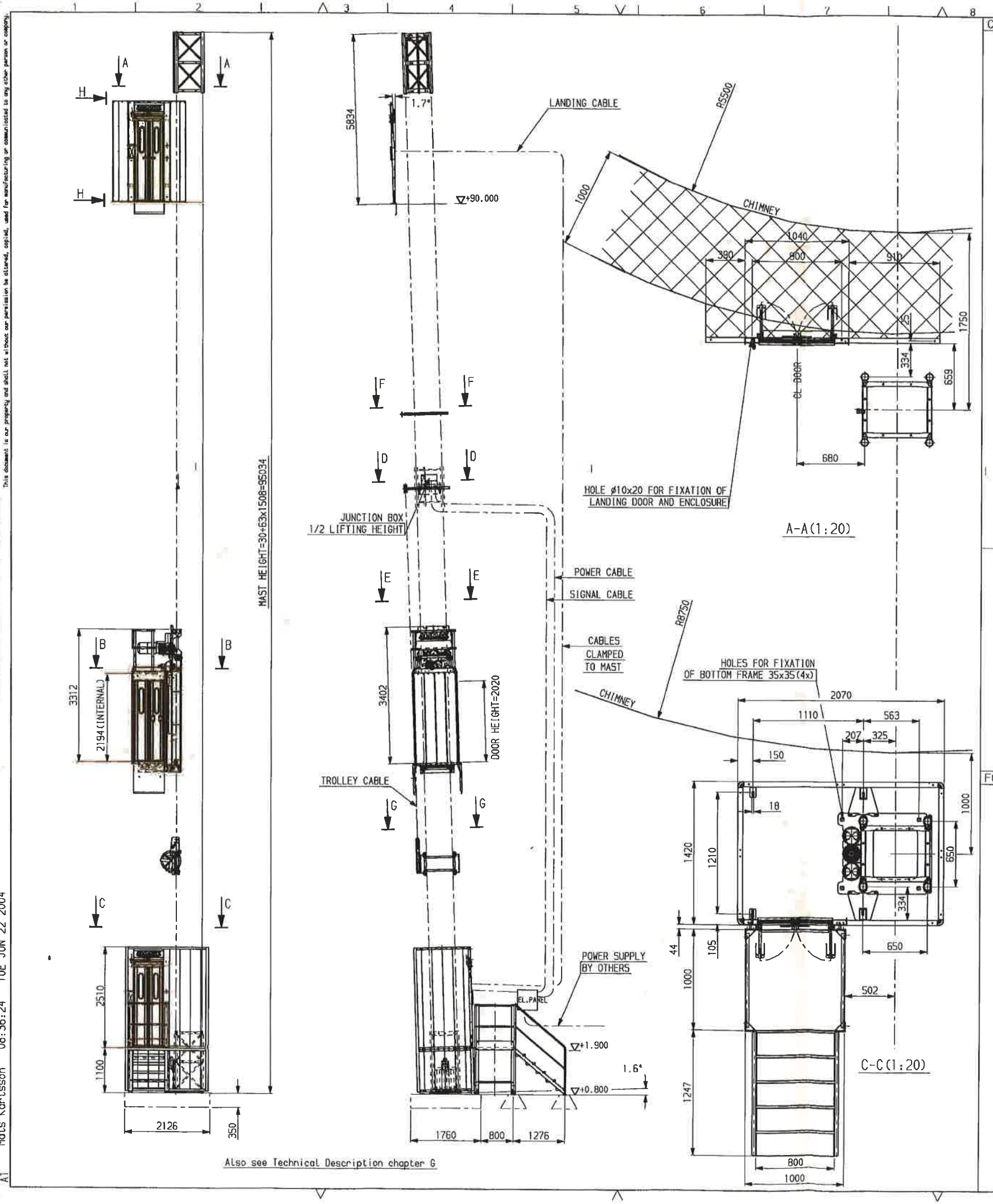

CABLE GUIDING

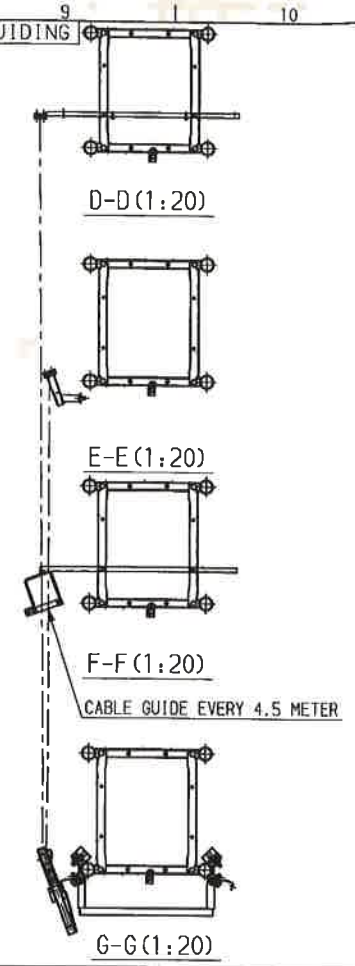

FIXATION OF ENCLOSURE

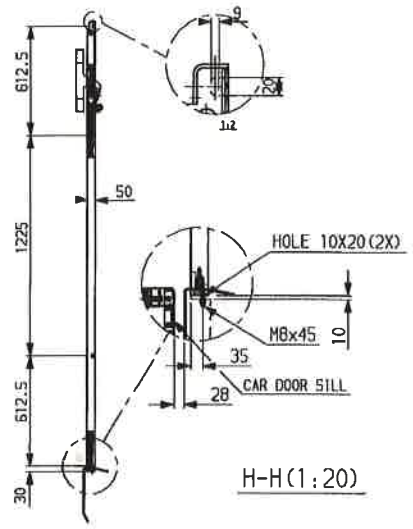

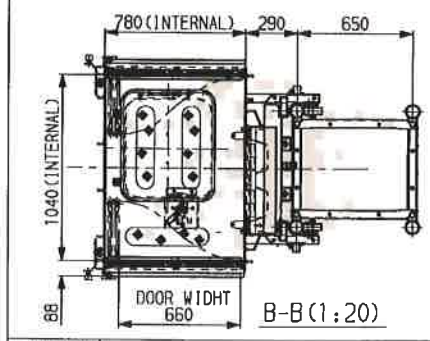

FORCES

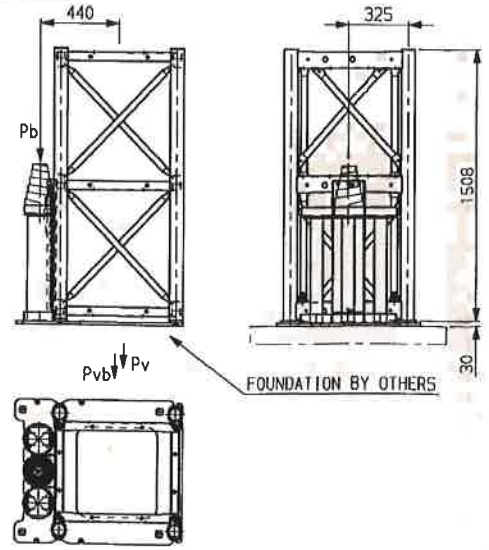

FORCES

SEE SEPARATE CALCULATION

TIE IN

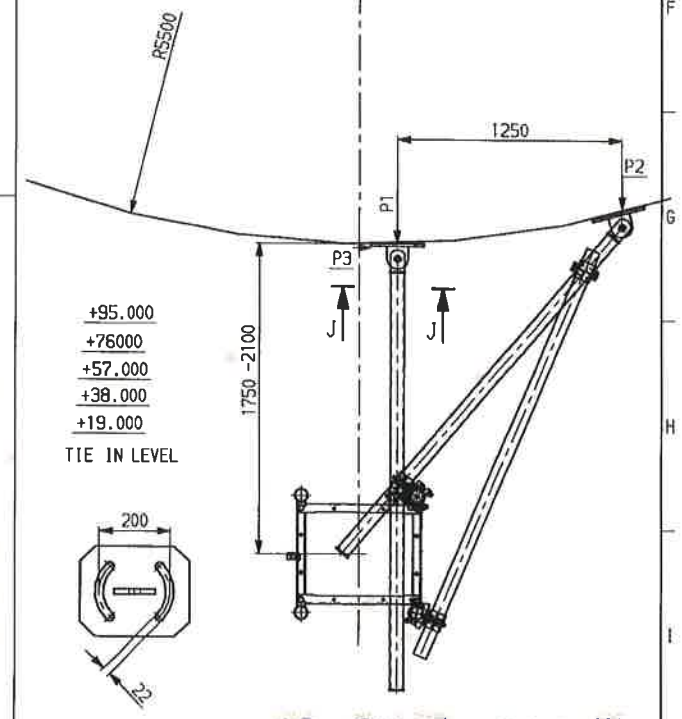

AS BUILT 06.11.14

Talhu Oy
Petikontie 17, 01720 Vantaa
T (09) 854 5350, Fax (09) 854 5351

Konstr/Designer TT	Datum/Date 040129	Ritare/Drawer TT	Ersätter/Replaces
Godk/Approv HK	Datum/Date 040129	Ersatt av/Replaced by	Skala/Scale 1:50 1:20
Ytbehandl Surf. treat.		Benämning/Description INSTALLATION DRWG.	
Beskr1/Descr1 5E 300 DOL 780X1040 DOOR B 660			
Beskr2/Descr2 BALTI 5			
Material			
Vikt/Weight kg			
Blad/Page 1/1			
Ändr/Rev by TT	Datum/Date 040618		
Ritn nr/Dwg No. 9097027-250	Ändr/Rev C		
Jämför/Compare 9097027-146			
Art nr/Part No. 9092102-000			
Tolerans/Tolerances			
CAD			

ALIMAK

Mats Karlsson 08:36:24 TUE JUN 22 2004

A1