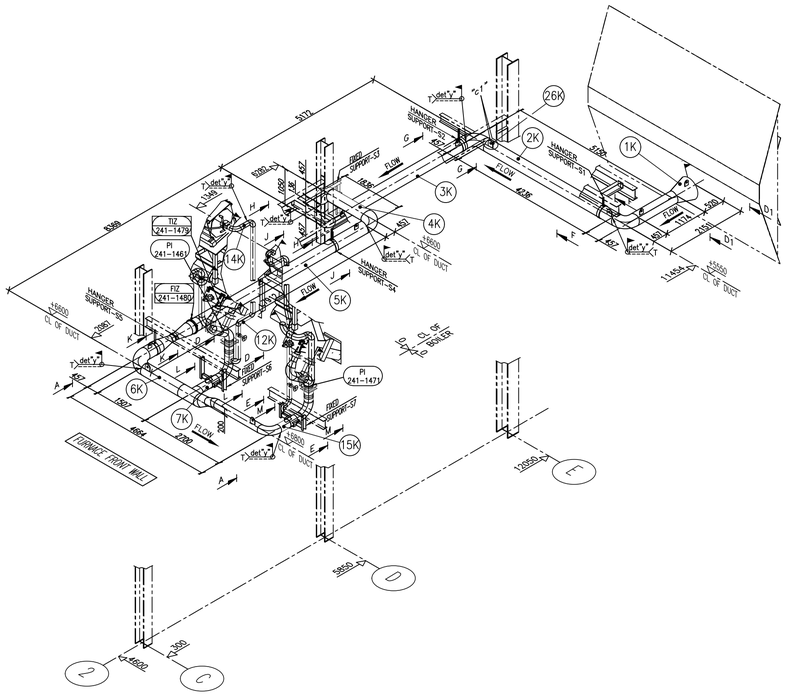

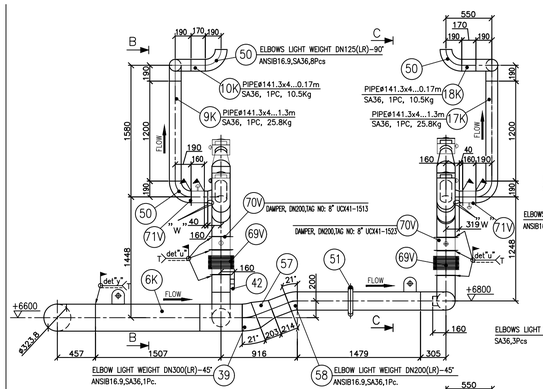

A–A
ELEVATION

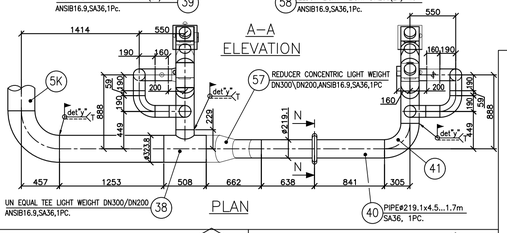

PLAN

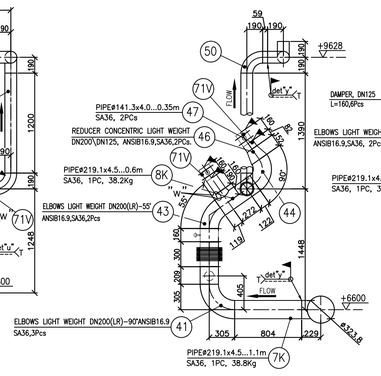

B–B

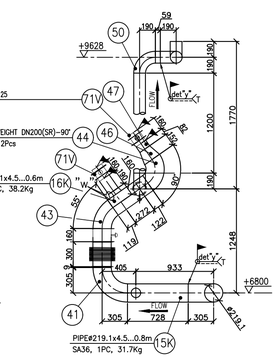

C–C

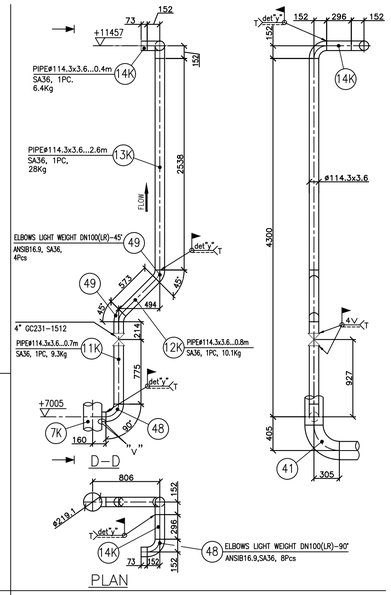

D–D

PLAN

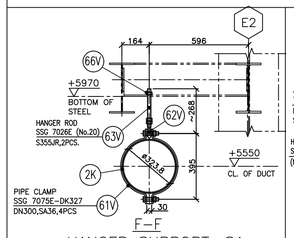

F–F
HANGER SUPPORT: S1
SCALE 1:12.5

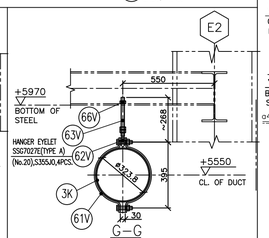

G–G
HANGER SUPPORT: S2
SCALE 1:12.5

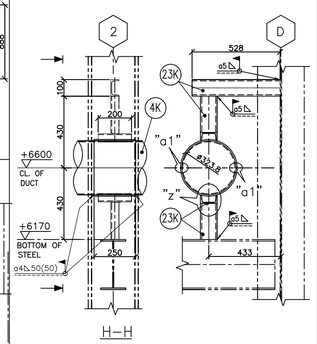

FIXED SUPPORT: S3
SCALE 1:12.5

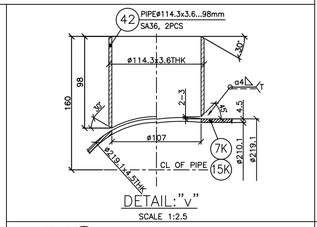

DETAIL:"v"
SCALE 1:2.5

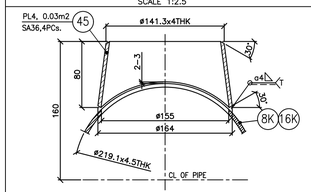

DETAIL:"w"
SCALE 1:2.5

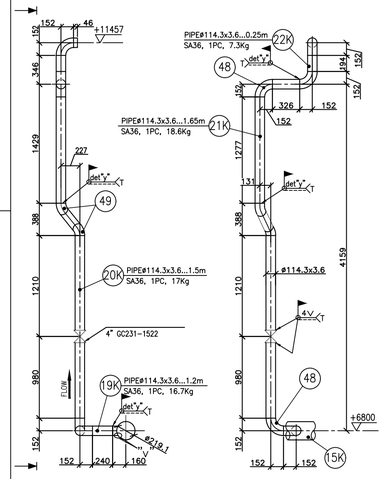

E–E

PLAN

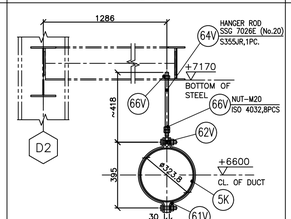

J–J
HANGER SUPPORT: S4
SCALE 1:12.5

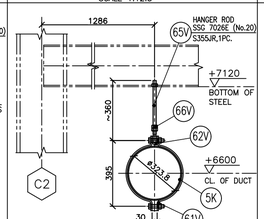

K–K
HANGER SUPPORT: S5
SCALE 1:12.5

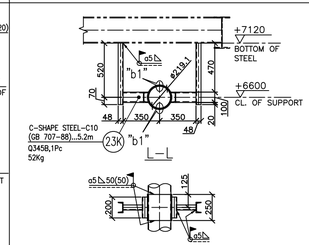

L–L

FIXED SUPPORT: S6
SCALE 1:20

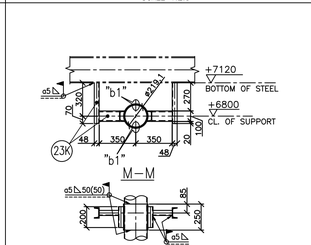

M–M

FIXED SUPPORT: S7
SCALE 1:20

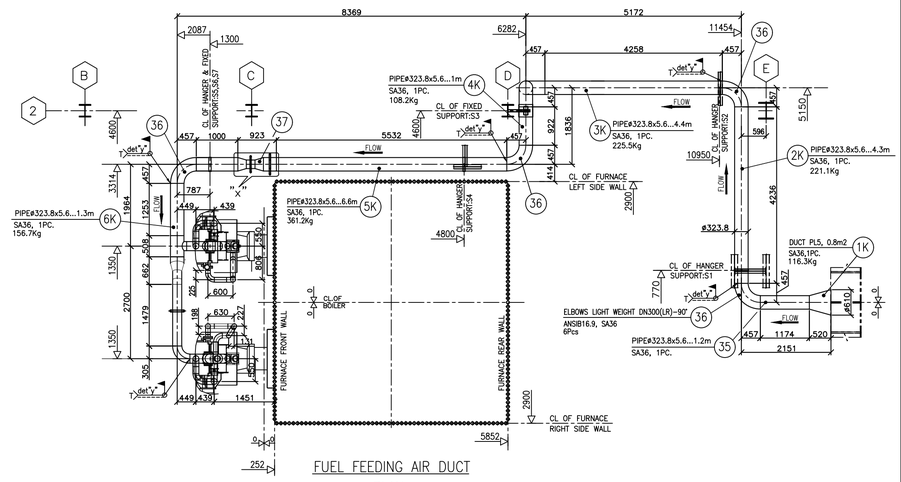

FUEL FEEDING AIR DUCT
PLAN
SCALE 1:50

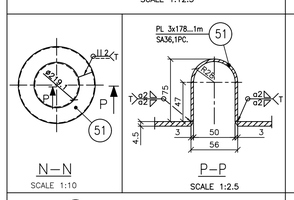

N–N
SCALE 1:10

P–P
SCALE 1:2.5

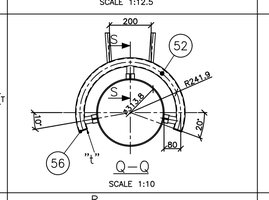

Q–Q
SCALE 1:10

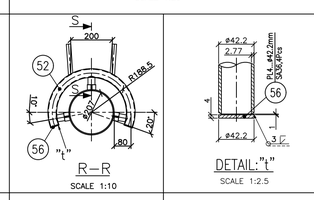

R–R
SCALE 1:10

DETAIL:"t"
SCALE 1:2.5

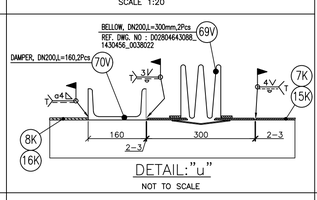

DETAIL:"u"
NOT TO SCALE

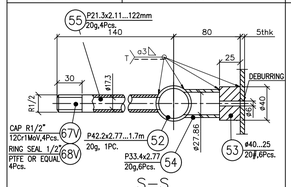

S–S
SCALE 1:2.5

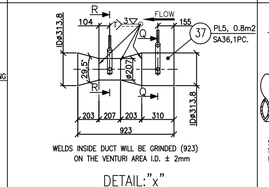

WELDS INSIDE DUCT WILL BE GRINDED (923) ON THE VENTURI AREA I.D. ± 2mm

DETAIL:"x"
SCALE 1:20

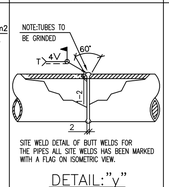

SITE WELD DETAIL OF BUTT WELDS FOR THE PIPES ALL SITE WELDS HAS BEEN MARKED WITH A FLAG ON ISOMETRIC VIEW.

DETAIL:"v"
NOT TO SCALE

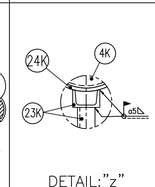

DETAIL:"z"
SCALE 1:5

SURFACE TREATMENT FOR ITEMS SUPPORT STEELS		
SURFACE PREP.	SP10	WASH
SURFACE TREATM.	-	
-SURFACE PROTECTION		µm
-PRIMER	ZINC RICH PRIMER	60 µm
-UNDERCOAT	2PC High Build Epoxy	70 µm
-TOP COAT	2C PUR (Polyurethane)	70 µm
	SHOP PRIMER	PRIMER UNDERCOATS' COAT
IN WORKSHOPS	X	X X X
ON SITE		
COLOUR OF TOP COAT		RAL 6029 Green

SHOP PRIMER IS EITHER KORRO-1 OR MEASHOP EV
DO NOT USE SHOP PRIMER UNDER ZINC SILICATE PAINTS.

SURFACE TREATMENT FOR ITEMS ALL INSIDE DUCT & OUTSIDE DUCT		
SURFACE PREP.	SP6(OUT)	WASH SP10(IN)
SURFACE TREATM.	-	
-SURFACE PROTECTION		µm
-PRIMER	KORRO PVB	75 µm
-UNDERCOAT	-	µm
-TOP COAT	-	µm
	SHOP PRIMER	PRIMER UNDERCOATS' COAT
IN WORKSHOPS	X	
ON SITE		
COLOUR OF TOP COAT		-

SHOP PRIMER IS EITHER KORRO-1 OR MEASHOP EV
DO NOT USE SHOP PRIMER UNDER ZINC SILICATE PAINTS.

NOTES:

01. DUCT DIMENSIONS ARE OUTSIDE MEASUREMENTS.
02. WELDING CLASS C EN 5817. OR ASME NON CODE WELD WORKMANSHIP STANDARD
03. ALL CORNERS AND EDGES HAVE TO BE ROUNDED Rmin=2 mm.
04. T–GAS TIGHT WELD.
05. ⌉ =WELDING AT SITE.
06. WELDS NOT SHOWN ▷a4△
07. W.A=WORKING ALLOWANCE
08. REFER DRAWING:–

ALL WELDS 100% THIGHTNESS TEST

DESIGN PRESSURE: –3/20kPa.
TEMPERATURE 350°C

FINAL AS ON 18/11/2013

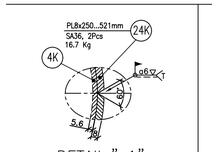

DETAIL:"a1"
SCALE 1:2.5

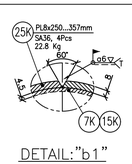

DETAIL:"b1"
SCALE 1:2.5

LOCATION OF LIFTING LUG TERMINATED ON WORKSHOP AND ON ASSEMBLY SITE
PT/MT 100%

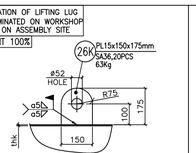

DETAIL:"c1"
SCALE 1:10

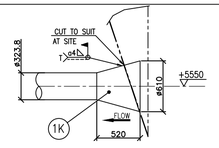

D1–D1
SCALE 1:25

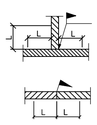

POINTS FOR ERECTION JOINTS
AT ERECTION LEAVE THE POINT TO BE WELDED UNCOATED: l= 50 MM AREA. PROTECTION BY KORRO-E (18 um)

ALLOWED SUBSTITUTIVE MATERIAL	
ASME	EN
SA 36	S235JRG2

ALLOWED SUBSTITUTIVE MATERIAL	
CHINA	EN
20g	P265GH
20#	S235JRG2
Q345B	S355JR
12Cr1MoV	S235JRG2

ALLOWED SUBSTITUTIVE PROFILE	
CHINA	EN
C–10	UNP 100

| | Maximum tolerances for welded structures–Lengths | | |